deView electronics

LVCS385I

Premium Plus Lens, IR Corrected, Aspherical, Varifocal, AI, F1.0, CS, 1/3" 3-8.5mm

Type		AI VARI	Mount		CS
Focal Length		3.0~8.5mm	Back Focus		7.94 ~ 13.96mm
Fno.		F1.0	Mechanical Bf		7.94mm
Designed Image Format		1/3"(4.8x3.6mm)	Exit Pupil		–
Operation Range	Iris	F1.0–F360	Filter Size		–
	Focus	0.2m ~ infinity	Aperture	Front	ø20.1mm
	Zoom	3.0~8.5mm		Rear	ø9.0mm
Control	Iris	DC Galvanometer			
	Focus	Manual	Dimention		35x47.4x46mm
	Zoom	Manual	Weight		–
Object Size at MOD	Wide	–			
	Tele	–			
Field of View	D	1/3" 114.1°~41.9°	1/4" 84.6°~31.6°		
	H	90.5°~33.6°	67.2°~25.2°		
	V	67.2°~25.2°	50.2°~19.0°		
Control		Iris	Focus		Zoom
Driving Coil/Supply Volt.		190Ω	–		–
Damping Coil/Current		855Ω	–		–
Response Time		–	–		–
Potentiometer		–	–		–
Light Measuring Method		–			
Input Signal		–			
Iris Accuracy		–			
Sensitivity Adjustment		–			
Operating Temperature		–10 ~ +50 Celsius			

1/3" CS CSD

DIMENSIONS

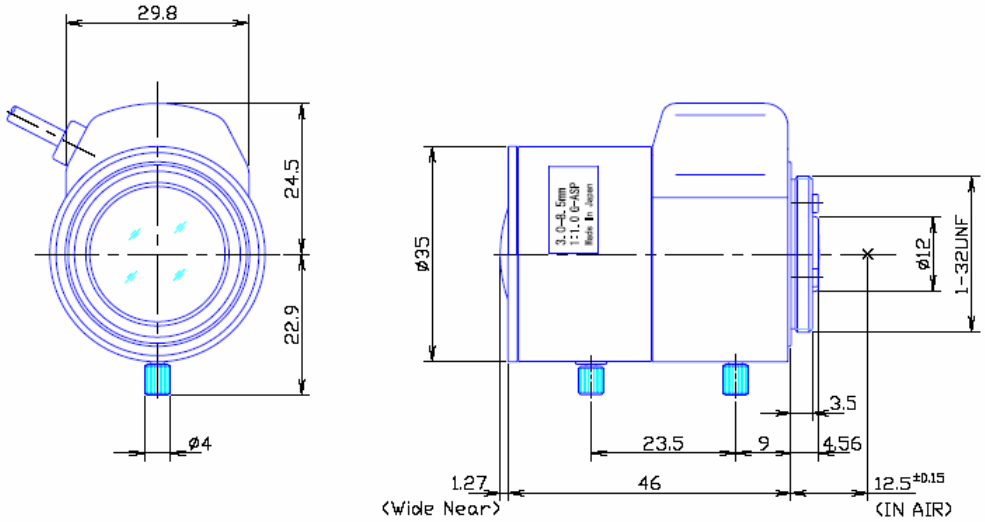

Wiring Diagram

1) 4 Pin Standard Connector for Auto Iris

Pin No.	
1	Damping (-)
2	Damping (+)
3	Driving (+)
4	Driving (-)

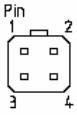

Subject to change without notice